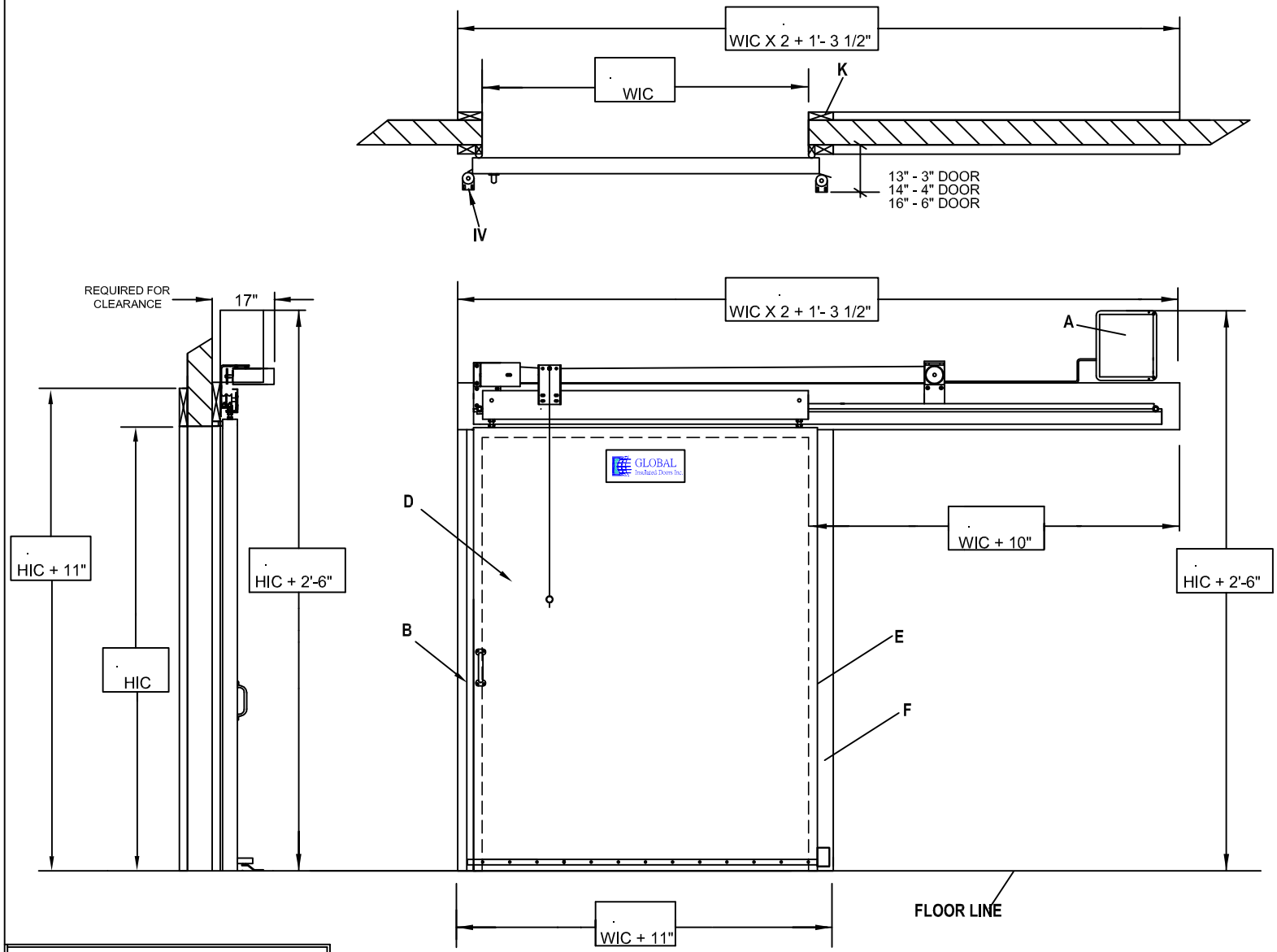

OPERATING TEMPERATURE		
DOOR	TRACKSIDE	WALLSIDE
REQUIRED FOR PRODUCTION		

RIGHT SLIDE DOOR SHOWN

LEFT SLIDE MIRROR OPPOSITE

4" COOLER - MODEL 603TNE

FOR:	P.O.#:	DATE:	DRAWN BY:	APPROVED BY:
JOB:	F.O.#:	TAG:	CHECKED BY:	LAST REVISION:

DOOR #	QTY	W. I. C. WIDTH IN CLEAR	H. I. C. HEIGHT IN CLEAR	DOOR TYPE	LOCK	OPERATOR VOLTAGE	JAMB DEPTH	SLIDE	SERIAL NUMBER

SINGLE HORIZONTAL SLIDE

COLD STORAGE DOOR

POWER

MODEL 603TNE

INSTALLATION REQUIREMENTS

I. Floor under door must be level and smooth
II. Wall behind header and casings must be smooth in a common plane.
III. Mounting holes 3/4" diameter (drilled in field - by others).
IV. Stayrollers installed in field - by others.

DOOR PANEL AND FRAME POWER OPERATED DOORS

A. OPERATOR. SINGLE PHASE INPUT VOLTAGE REQUIRED. (3 phase supply requires 1 capped leg). Operator and control box prewired at factory. Exposed wiring is sealtight conduit.
B. Safety reverse. Door will reverse to full open position and stop if object is struck while closing.

DOOR PANEL AND FRAME

D. DOOR PANEL
- ☐ 24 GA white stucco steel
- ☐ 24 GA white smooth steel
- ☐ 24 GA 304 2B stainless steel
- ☐ OTHER:

E. Extruded aluminum door frame.
F. CASINGS AND HEADER
- ☐ Wood clad with ☐ Gray plastic clad with
- ☐ 24 GA white stucco steel
- ☐ 24 GA white smooth steel
- ☐ 24 GA 304 2B stainless steel
- ☐ OTHER:

G. ☐ FREEZER DOOR (4" and 6" doors only)
Heaters are standard equipment on all freezer doors - 110V connection required. Freezers are supplied with 2 standard pullcord.

. ☐ Two standard pullcord.

OPTIONS

H. ☐ ADDITIONAL HEATED SEALS
I. FASTENERS
- ☐ Through bolts - Nylon Threaded Rods (frame drilled in field - by others)

J. ☐ INSIDE JAMBS
- ☐ Wood clad with ☐ Gray plastic clad with
- ☐ 24 GA white stucco steel
- ☐ 24 GA white smooth steel
- ☐ 24 GA 304 2B stainless steel
- ☐ OTHER:

K. ☐ BACKFRAME
- ☐ Wood clad with ☐ Gray plastic clad with
- ☐ 24 GA white stucco steel
- ☐ 24 GA white smooth steel
- ☐ 24 GA 304 2B stainless steel
- ☐ OTHER:

L ☐ KICKPLATES ☐ Trackside ☐ Wallside
Height: ☐ 18" ☐ 24" ☐ 36" ☐ 48" ☐ OTHER:
- ☐ Aluminum diamond tread (1/8" thick)
- ☐ 18 GA 304 2B stainless steel
- ☐ OTHER:

M. ☐ LOCKING DEVICE - Hasp Type
- ☐ TRACKSIDE ☐ WALLSIDE
- ☐ with power cut-off and emergency release
- ☐ with power cut-off (NO EMERGENCY RELEASE)

N. ☐ ( ) VISION PANEL - 24" x 24" ☐ Lexan ☐ Glass
O. ☐ MOTION DETECTOR ☐ Open ☐ Safety
P. ☐ PHOTOCELL ☐ Open ☐ Safety
Q. ☐ POM (Partial Open Mode)
R. ☐ PUSHBUTTONS ☐ Single ☐ Double ☐ Triple
- ☐ in addition to pullcords ☐ in lieu of pullcords

S. ☐ Remote Operator
T. ☐ TIME DELAY CLOSE
U. ☐ LOOP DETECTOR ☐ Open ☐ Safety

GLOBAL Insulated Doors Inc.